Jack-up oil rig

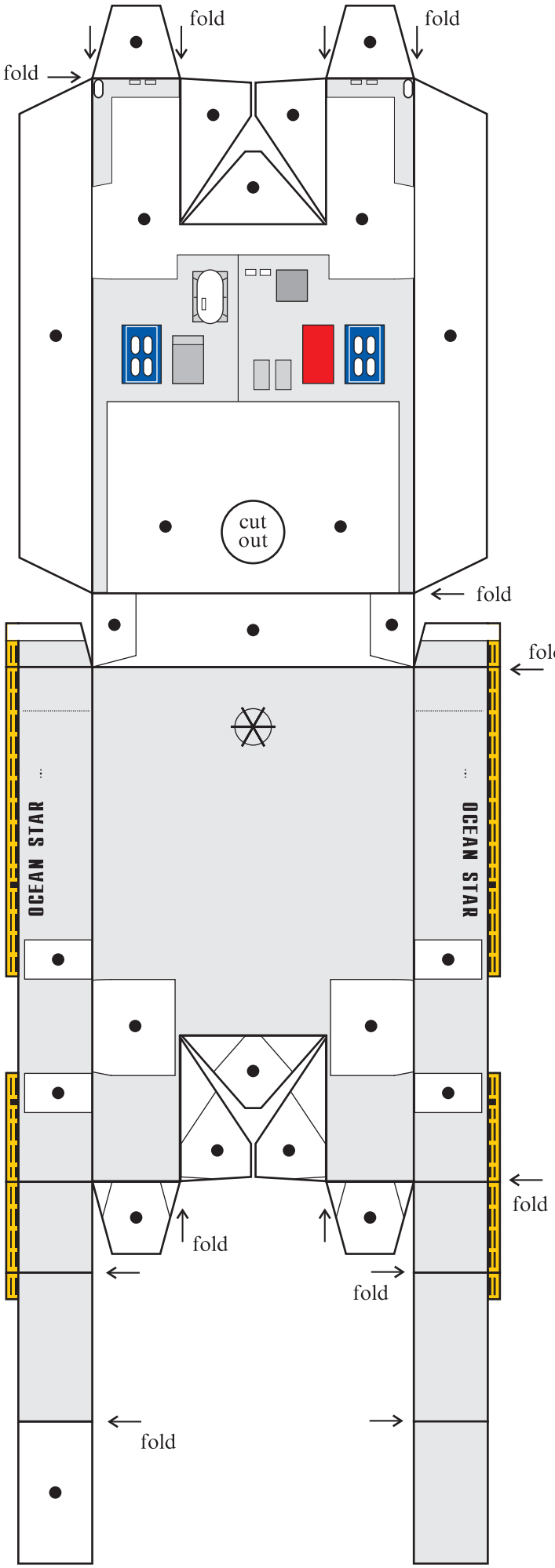

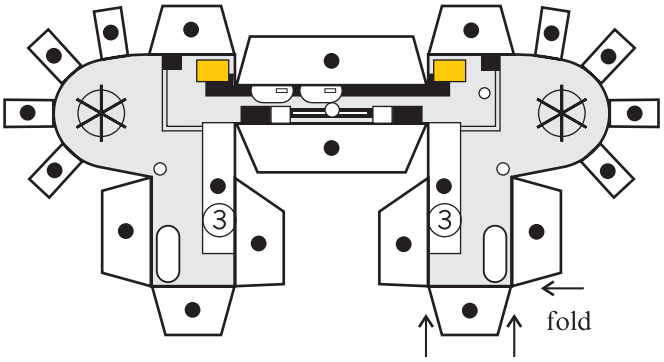

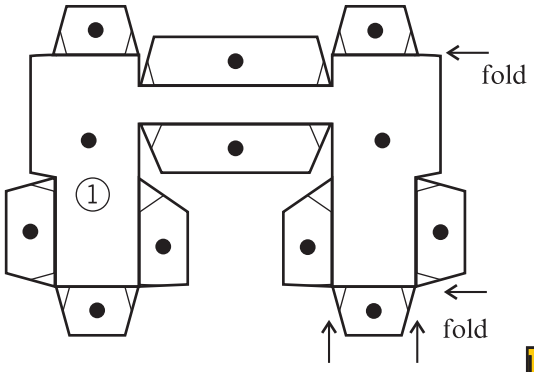

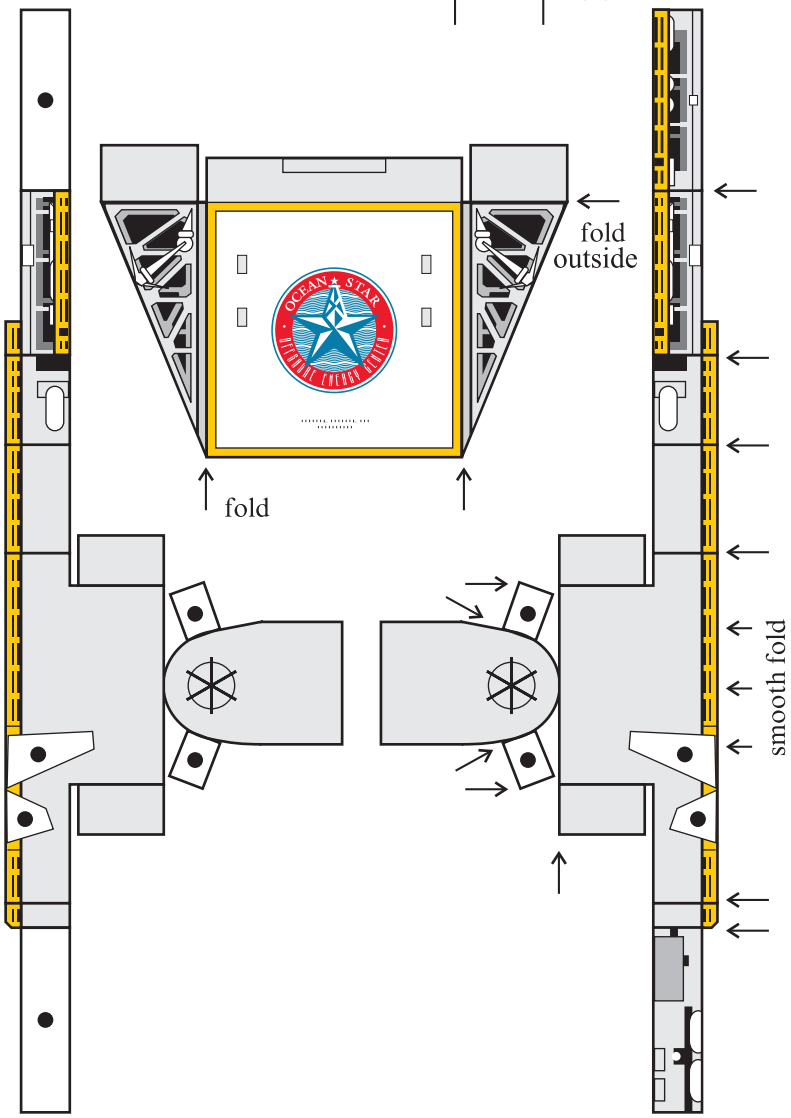

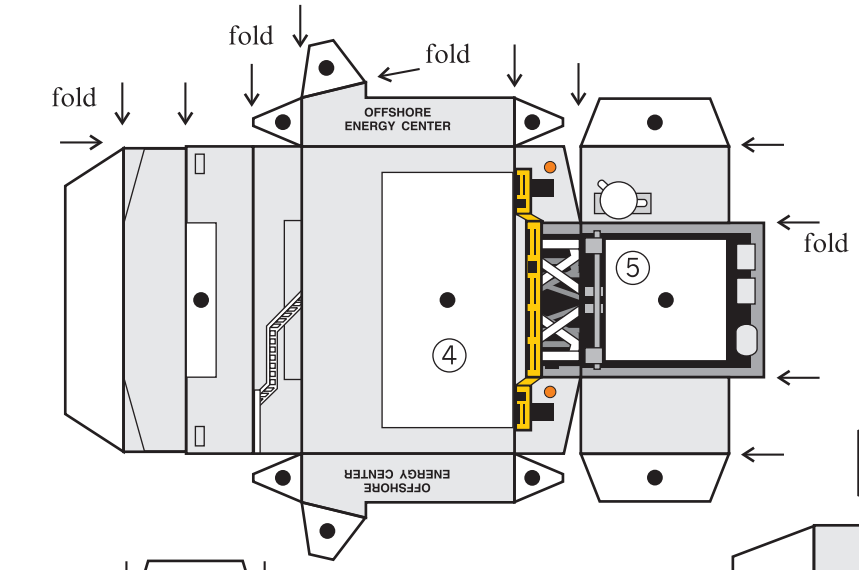
fold
fold
fold
OFFSHORE
ENERGY CENTER
fold
4
5
OFFSHORE
ENERGY CENTER

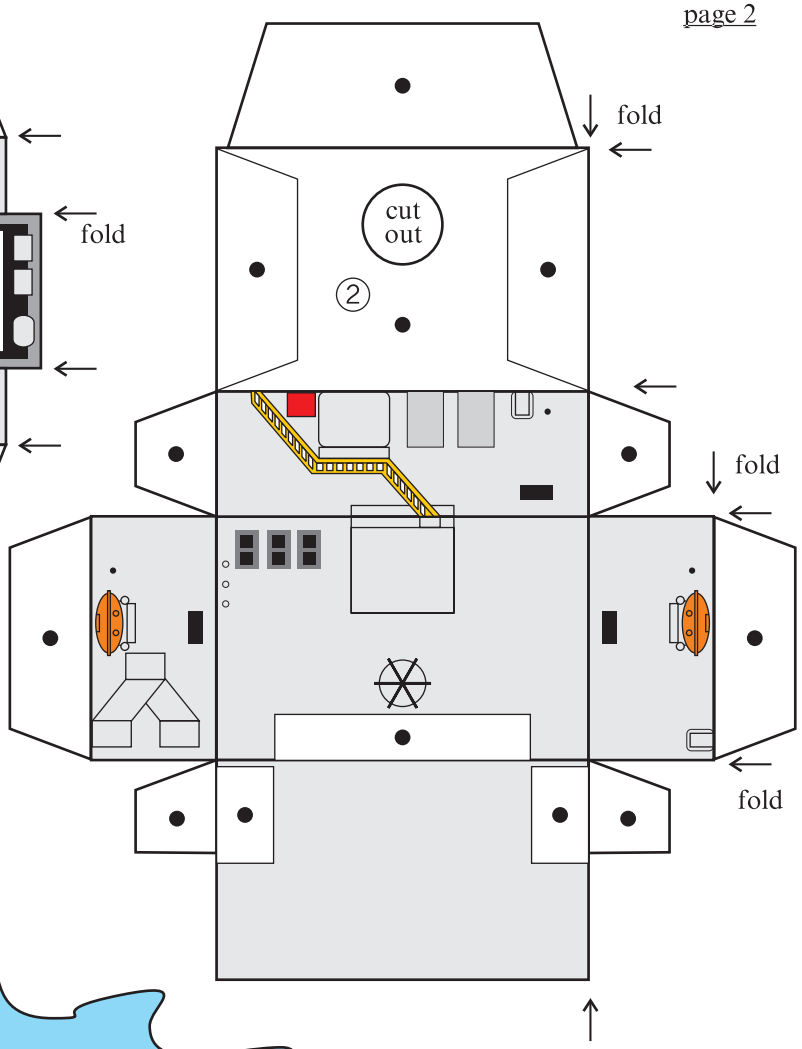
fold
cut
out
2
fold
fold

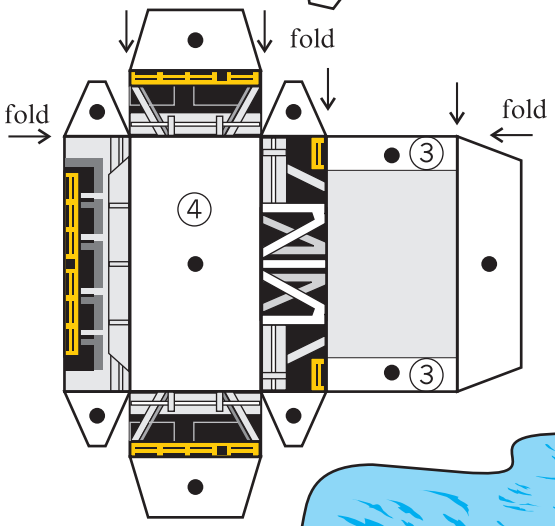
fold
fold
fold
4
3
3

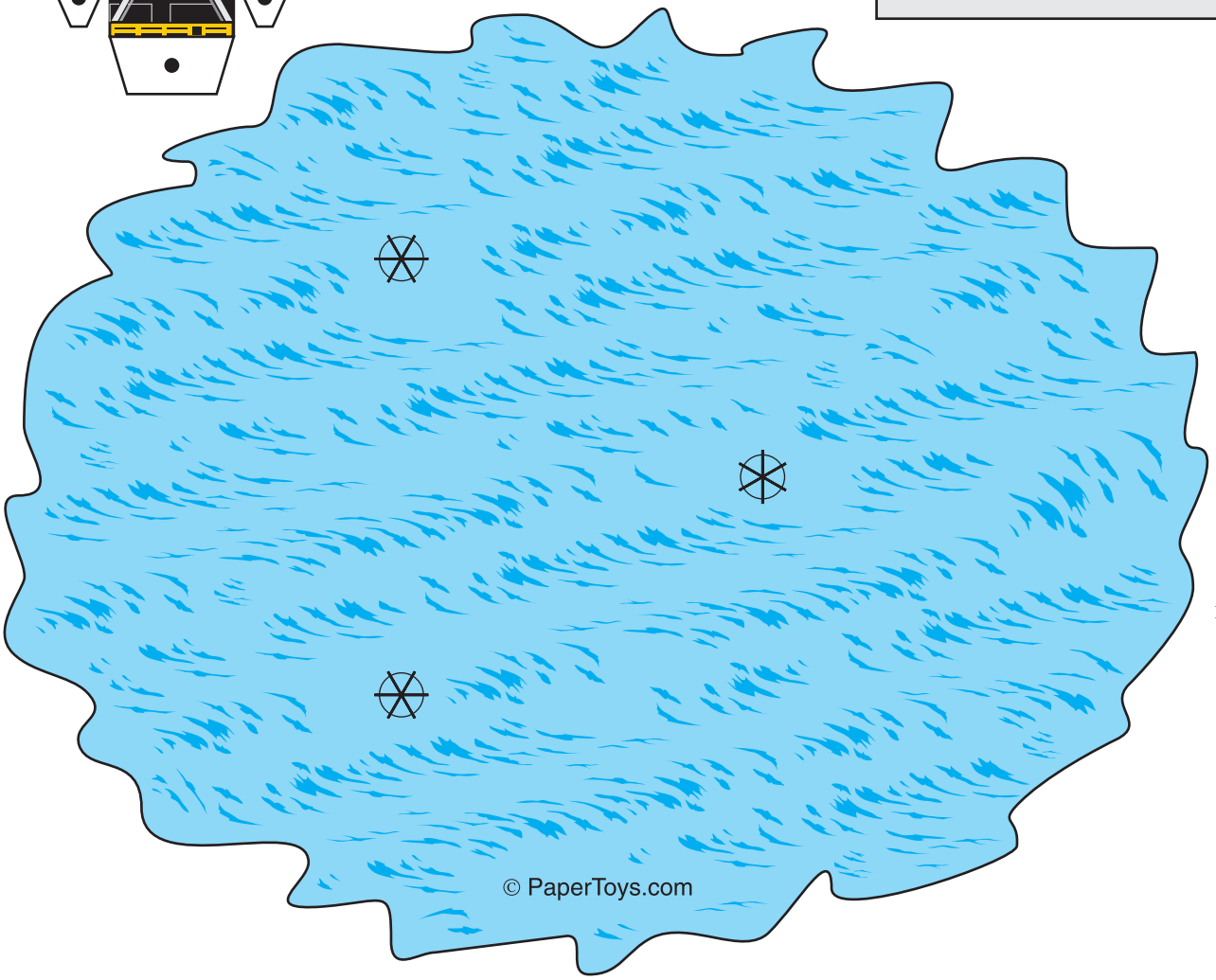
© PaperToys.com

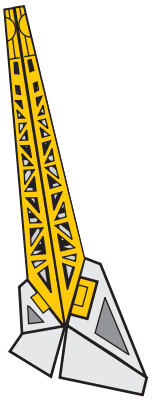

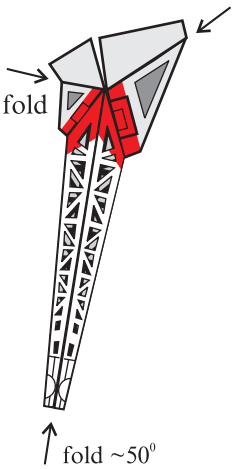
fold
fold ~50°

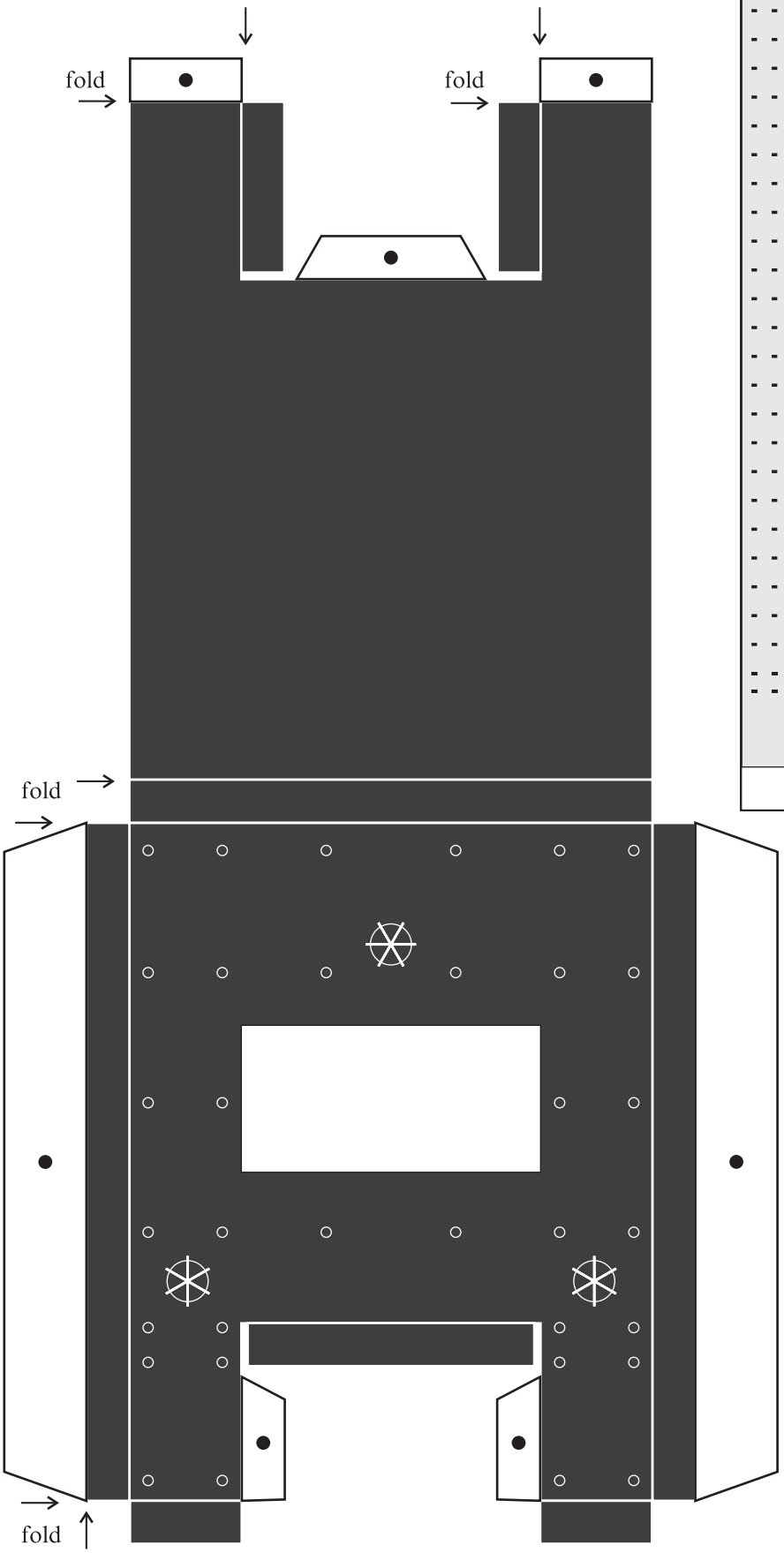
fold
fold
fold
fold

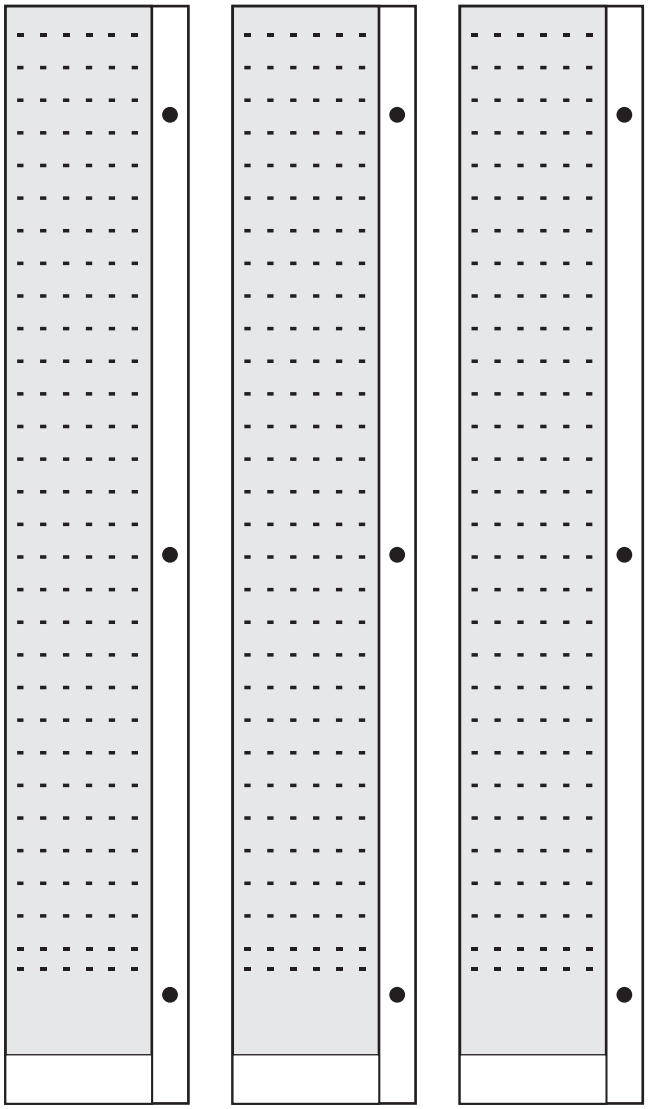
smooth fold

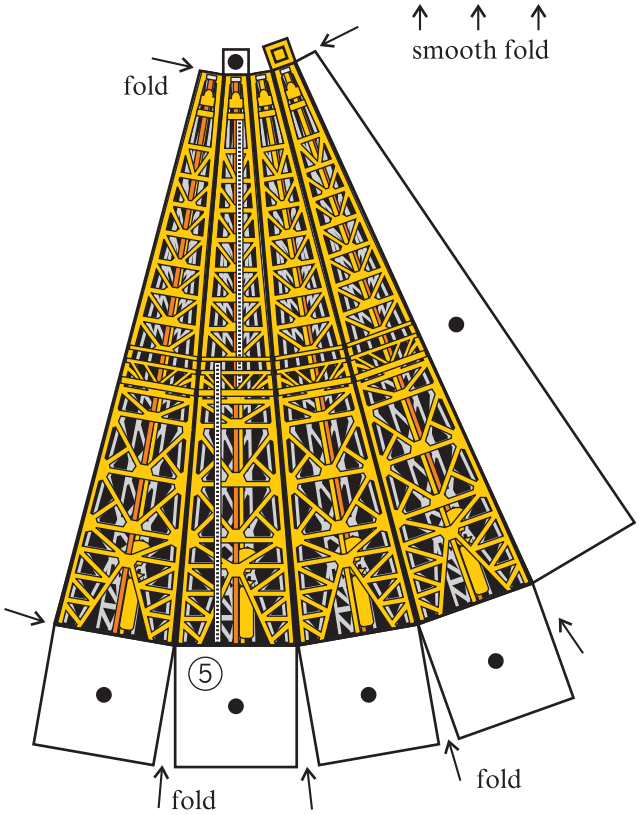
fold
5
fold
fold

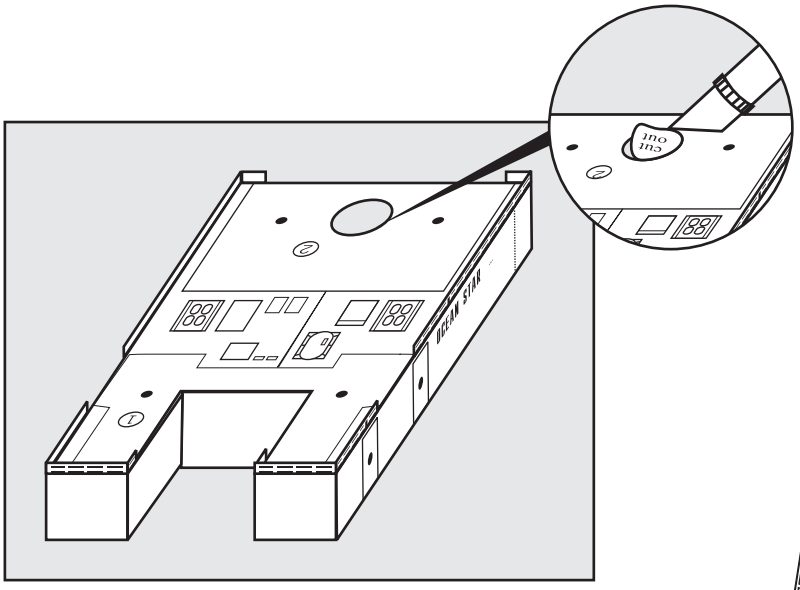

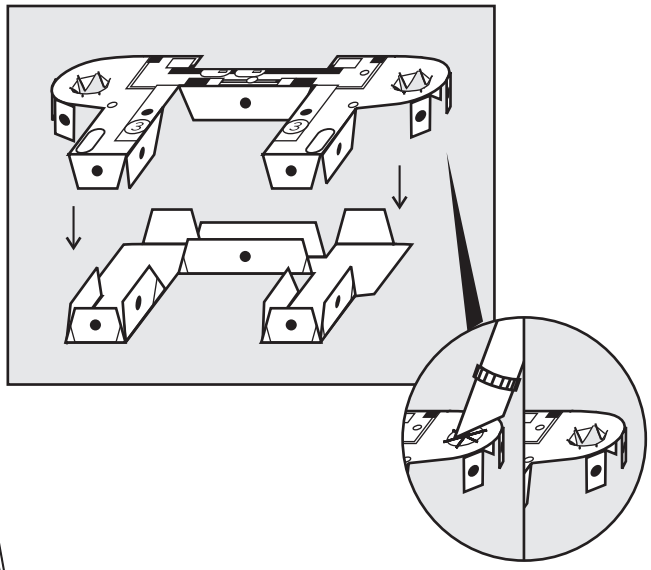

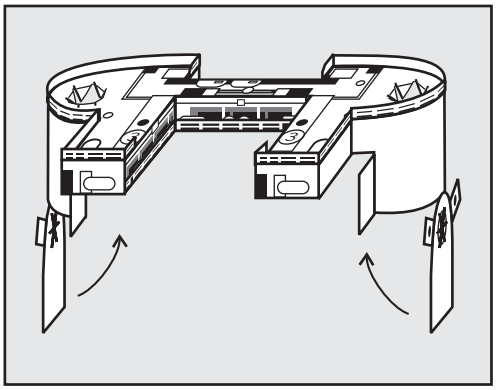

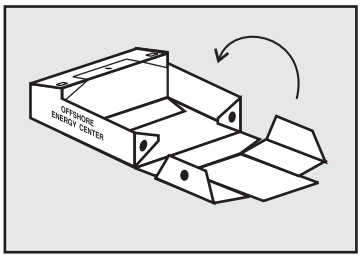

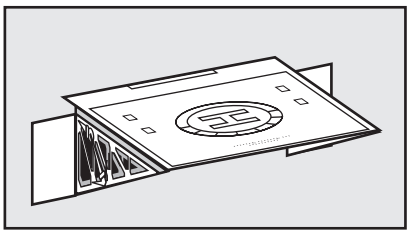

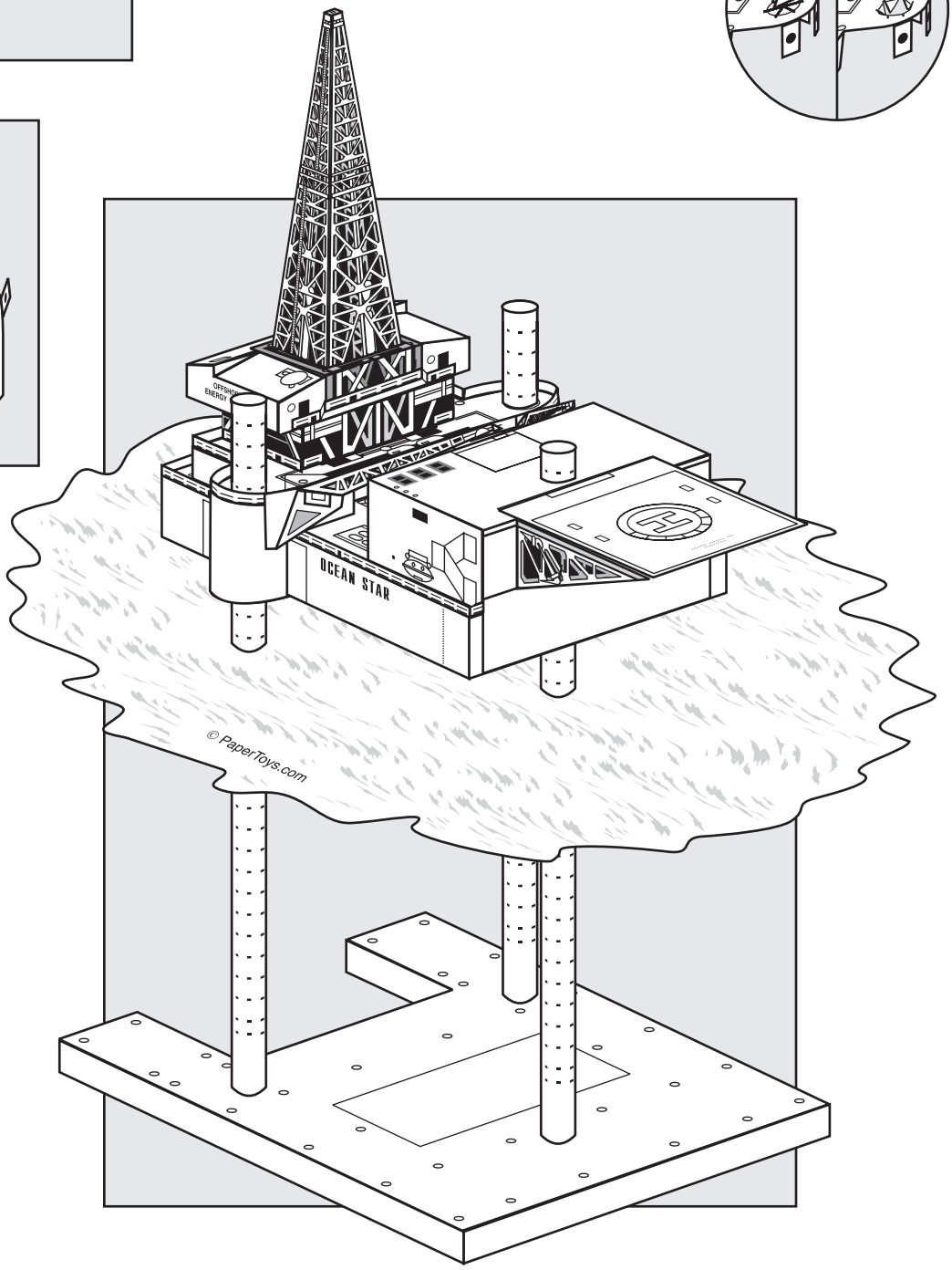

© PaperToys.com